Logis
Single lever basin mixer 100 with pop-up waste set
Finish: **Chrome** Article Number: **71100000**

Description

product features

- consists of: single lever basin mixer, waste set
- ComfortZone 100
- projection: 108 mm
- spout height: 93 mm
- spray type: normal spray
- maximum flow rate at 3 bar: 5 l/min
- ceramic cartridge
- temperature limitation adjustable
- suitable for continuous flow water heaters
- pop-up waste set G 1¼
- material waste set: synthetic
- connection type: G ⅜ connections
- connection dimension: DN15
- EPD Basin Faucets

Technology

AirPower EcoSmart Comfort Zone

Product image

Scale drawing

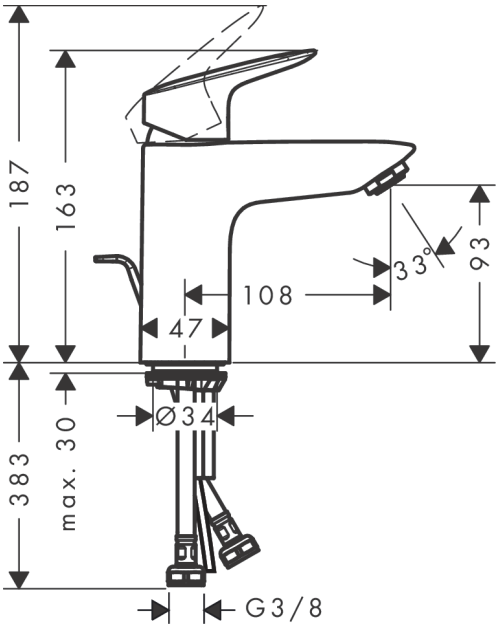

Logis
Single lever basin mixer 100 with pop-up waste set
Finish: **Chrome** Article Number: **71100000**

Flowchart

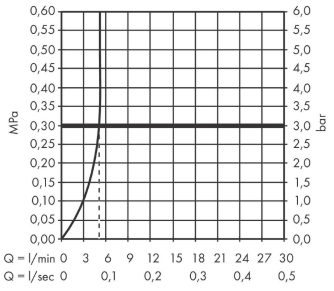

Logis
Single lever basin mixer 100 with pop-up waste set
Finish: **Chrome** Article Number: **71100000**

Exploded Drawing

Year of production: **>05/17**

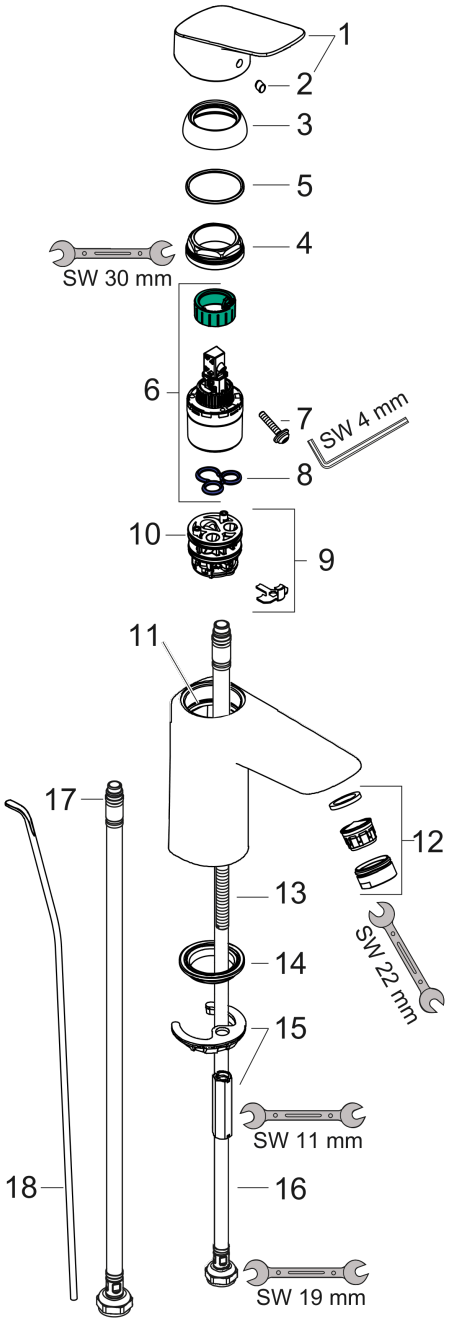

Logis
Single lever basin mixer 100 with pop-up waste set
Finish: **Chrome** Article Number: **71100000**

Spare part list

Year of production: **>05/17**

Pos.	Description	Article Number	Price	PU
1	handle	92224000	€ 45,82	1
2	screw cover	96338000	€ 3,33	1
3	flange	97406000	€ 18,80	1
4	nut	97209000	€ 14,28	1
5	O-Ring 32x2	98193000	€ 3,33	1
6	cartridge, assy	92730000	€ 58,67	1
7	locking screw for handle	95140000	€ 5,36	1
8	seal	95008000	€ 8,69	1
9	adapter for cartridge	98750000	€ 11,66	1
10	O-Ring 30x2	98186000	€ 3,33	1
11	O-ring 35x2	92604000	€ 5,36	1
12	aerator M24x1 (5 l/min)	92372000	€ 18,80	1
13	screw M8 x 68	97736000	€ 5,36	1
14	seal Ø 42	98722000	€ 5,36	1
15	fixing set	96016000	€ 28,92	1
16	connection hose 450 mm M8x0,75 G3/8	97206000	€ 28,92	1
17	O-ring 6,6x1,6	93019000	€ 3,33	1
18	pull rod	96657000	€ 11,66	1
a	pop up waste	92168000	€ 36,89	1